Arc Flash: a review of face protection options, standards & technologies

Author:

Mr Rod King
Centurion Safety Products

Higher National Certificate in Engineering
Committee member of PH2 (UK Technical Committee for eye and face protection).
Member of the British Safety Industry Federation (Eye & Face, Hearing and Head Protection Product Groups)

CENTURION®
WHEN CLARITY COUNTS

Contents

Introduction

In many countries, Arc Flash incidents are amongst the leading causes of injury and death to electrical workers, but despite this, there still remains confusion and controversy regarding how best to protect the workforce, and where the responsibility for this protection lies from a regulatory perspective.

The purpose of this paper is to provide you with important information about Arc Flash and the most suitable face protection equipment options.

With more than half of all injuries / risks relating to Arc Flash occurring above-the-neck, two of the most experienced above-the-neck specialists have collaborated to launch an innovative new protective solution.

Centurion Safety Products, designers and manufacturers of advanced head protection systems, and Paulson International, renowned for developing superior screens to protect against Arc Flash, fire, and other dangerous elements, have together produced an advanced face protection solution that offers first-rate protection for the wearer from an Arc Flash.

This paper focuses on the industries most commonly affected by Arc Flash and the true cost to both life and business (chapter 2); the different face protection safety standards around the world and the challenges caused by a lack of consistency (chapter 3); an overview of the range of face protection technologies available (chapter 4); and the importance of training and education to provide information on the dangers of Arc Flash and the most suitable PPE (chapter 5).

1.1 WHAT IS AN ARC FLASH?

An electrical Arc Flash (or blast) is an intensive lightning that occurs when an electrical discharge or short circuit moves through the air and releases an intense burst of energy.

Hotter than the sun and capable of creating a shrapnel explosion faster than a bullet, it can also result in large doses of electromagnetic radiation, toxic air, extreme noise and an explosive pressure wave.

1.2 HOW CAN AN ARC FLASH OCCUR?

Over 70% of Arc Flash incidents occur during, or immediately after, electrical maintenance.

Most commonly, it can be the result of a loose cable or connector, working with dirty or rusty terminals, or simply a tool dropped near a busbar.

Other causes can be improper work, live contacts, over voltage or water ingress.

It is vital that we increase understanding amongst both employers and employees of how these incidents occur, what can be done to prevent them, and how they can then protect themselves in the event of an Arc Flash.

CENTURION®
WHEN CLARITY COUNTS

Underreported and Underinformed – The True Impact of Arc Flash

It is impossible to isolate Arc Flash incidents down to any one specific industry. The widespread use of electric power across all work environments means that Arc Flash incidents are a more frequent risk than many people are aware.

2.1 HOW COMMON ARE ARC FLASH INCIDENTS?

In the United States, there are an estimated 30,000 Arc Flash incidents every year, leading to 7,000 burns, with more than 2,000 people hospitalised. (Source : National Safety Council)

In the UK, there are an estimated 400 Arc Flash incidents, resulting in two fatalities, an average of 36 burn injuries and more than 230 x 7-day injuries, every single year. (Source: HSE 2014/15)

2.2 MOST COMMON APPLICATIONS AFFECTED BY ARC FLASH

The numbers opposite are surprising for some, but when we consider the multiple situations where an Arc Flash can occur, we start to understand why they may be more common than previously considered.

Applications that can lead to an Arc incident include, but are not limited, to:

- Live cable jointing
- During phasing in operations (high voltage)
- Racking in and out of switchgear
- Reclosing of electrical switchgear onto a fault
- Mal-operation or failure of switchgear
- Excavating near live cables
- Accidental contact with live conductors during maintenance

It is also believed that between 60%-70% of Arc incidents are underreported (Source: HSE 2014/15), which could mean that those numbers may not tell the whole story.

Because many people do not understand the Arc Flash phenomena, many Arc Flash incidents are statistically categorised as regular fires. Therefore incidents may be either more common or more serious than reported, and we shouldn't make the mistake of thinking they are limited to high voltage environments.

An Arc Flash is basically an effect caused by a very high fault current—thousands of amperes, travelling through ionized air, and can easily occur in low voltage environments too. It's imperative that the right precautions are taken at all times, even when working on something as 'simple' as a house connector box, the engineer should be using a protective screen that can suitably protect them from a potential Arc Flash.

CENTURION®
WHEN CLARITY COUNTS

2.3 ARC FLASH RISK ASSESSMENT

As with most things in life, prevention is almost always better than cure, so it's important that a risk assessment is always conducted in environments where one could be exposed to an Arc Flash.

The Hierarchy of Controls should always be followed and actions specific to each situation should be taken, in order to limit the chance of an Arc Flash. These include:

- Regular maintenance and cleaning
- Replacement of overaged or open cabinets
- Continuous training of the staff
- Reducing supply, i.e. open ring supplies
- Increase working distance to potential arc sources
- Adjusting breaker timings to reduce the resulting Arc Flash calorie rating
- Installing an Arc guard (photo cells on the busbar)
- Installing an Arc shoot (energy directed via ductwork)
- Remote robot switching
- Digital remote switching
- Arc blankets to 40 cal/cm^2

Figure 2.3: Hierarchy of Controls

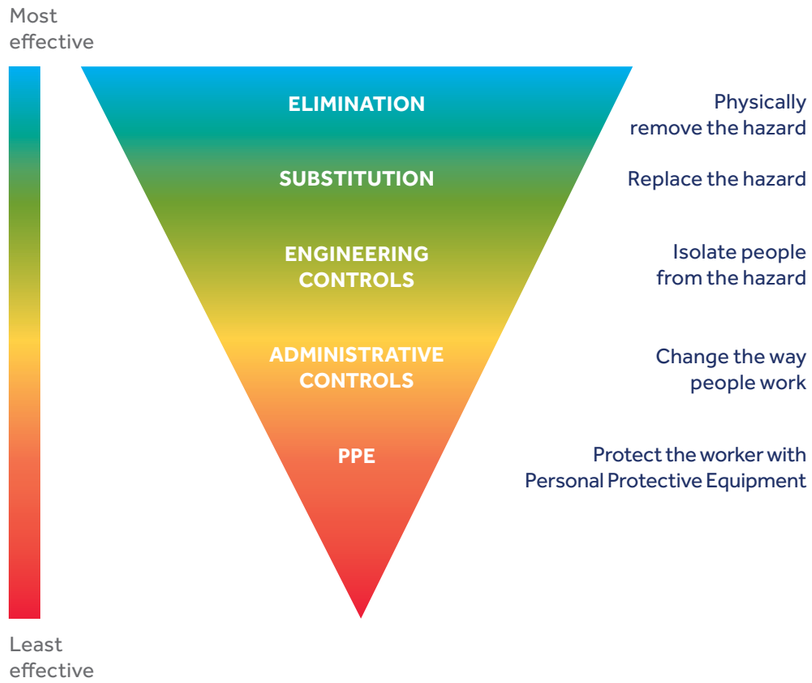

2.4 INJURIES CAUSED BY AN ARC FLASH

It is important to remember that PPE does not limit the risk of Arc Flash occurring, it is simply the last resort, as even after the above Hierarchy of Controls have been put into place, one cannot completely guarantee against an Arc Flash occurring. Without the use of the correct PPE, injuries caused by an Arc flash can be severe, namely:

- Severe skin burns caused by direct heat exposure
- Serious burns from droplets of molten metal
- Damage to eyesight from the high intensity flash
- Loss of memory or brain function due to concussion
- Hearing loss through ruptured ear drums
- Shrapnel wounds caused by flying metal debris
- Other physical injuries, such as broken bones, caused by being blown off ladders or into walls
- Secondary effects, such as social isolation and depression, due to irreparable disfigurement, or the need for long term care with associated financial repercussions

Rod King, Test Engineer at Centurion, said:

"We need to remember that PPE is not a resolute solution. Risk assessments should be carried out first and preventative steps put in place. PPE should then be provided according to the remaining risk. PPE is the protection barrier if all else fails. It's therefore imperative that the right choices are made by both employers and electrical engineers.

Evidence points to the fact that whenever a worker suffers thermal injuries, at least 50% of the time these injuries or risks will occur to the face or head. As experts in above-the-neck protection, we wanted to focus on the best possible solution having partnered with an arc expert to address this area."

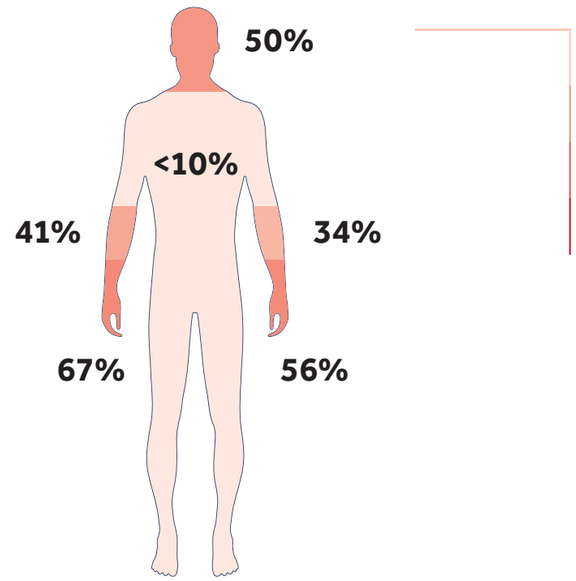

A Land of Confusion:

The Difference in Safety Standards for Above-The-Neck Protection, and the Need for an Updated and Consistent Regulatory Framework

For many years, a lack of awareness concerning the Arc Flash phenomena meant that the hazard was not taken into account when defining PPE for those working in front of energised electrical facilities, such as switching cabinets and transformers.

Electrical shock was previously seen as the only important risk related to live electrical work, with little or no consideration given to the potential injuries that could be caused to the face or head.

That was until Ralph Lee published the article "The Other Electrical Hazard: Electric Arc Blast Burns" in 1982.

Since then, improvements in both regulation and adopted safety standards have been made, but the Arc Flash topic has still not been widely understood.

While the obvious effects like heat, splashes of molten metal and fragments released by the explosion energy were initially considered, the electromagnetic radiation and the plasma accompanying the flash were more or less neglected. Also although invisible to the eye, Infrared radiation can also burn the eyes and face behind the face screen without degrading the face screen itself.

And as a wider topic, the subject of how to provide the best above-the-neck protection in the event of an Arc Flash is something that has been varied and fragmented across the world.

3.1 EUROPEAN EN 166 – OPTION 8

The European standard for eye and face protection is EN 166. In section 7.2.7 there is an option for 'arc fault protection' - option 8. The only requirements to achieve this are described in the table below, which were derived from a series of Arc tests (of 12kA, 380-400V, 50Hz for a duration of 1 second) with different materials with subsequent visual inspections. It was assumed that a face screen which does not melt, burn or show other serious damage in an arc fault test also adequately protects the wearer.

Requirements	
Material	Polycarbonate, Cellulose Acetate or Cellulose Proprionate, with UV Protection. No exposed metal parts, all external edges radiussed, chamfered
Thickness	Minimum of 1.4mm
Scale	2-1,2 or 3-1,2
Height	Minimum screen vertical centre line depth of 150mm
Visible Light Transmittance (VLT)	≥ 74.4%

This in turn brings its own set of problems, as Rod King, Test Engineer at Centurion, explains:

" The current EN 166 – Option 8 standard references that the product should be made of one of three materials. During various research projects and testing procedures at Centurion over recent years, we found that only polycarbonate was suitable. We found cellulose acetate would even severely melt. Although polycarbonate is now widely used for Arc face protection, the EN 166 standard still specifies 'acetate' and this should be rectified in any new safety standards. "

Subsequent tests with sensors placed behind the screen have proven that the presumption initially made for granting EN 166 8 could not be justified because without additional tests it can not be proven that a high proportion of the radiation can or cannot pass through a face screen and burn the eyes and face without damaging the face screen itself.

In addition, because there is no Arc exposure test, such as the Arc Man or Arc-in-the-Box test (see 3.2 and 3.3), to prove the Arc face protection's suitability, additional requirements have now been enacted when granting the CE mark for new European Arc Flash PPE (option 8) – namely GS-ET-29, which covers all thermal hazards of an arc fault and further work safety-relevant requirements, like Visible Light Transmission.

3.2 GS-ET-29

In 2008, the German Institution for Statutory Accident Insurance and Prevention in the Precision Engineering, Electrical and Textile Industries (BGETEM) published GS-ET-29 "Additional Requirements for the Testing and Certifying of Electrician's Face Protection".

In GS-ET-29, the Arc-in-a-Box test is used to differentiate two Arc protection classes: Class 1 and Class 2 as outlined below, as well as three classes to differentiate the visible light transmittance (VLT).

Two arc protection classes:

Class	Incident energy	Cal/cm²
1	135kJ/m² incident energy	3.2 cal/cm² (4kA)
2	423kJ/m² incident energy	10.1 cal/cm² (7kA)

Three VLT classes:

Class	VLT Rating
0	≥ 75%
1	50% ≤ VLT ≥ 75%
2	VLT < 50%

The Arc-in-a-box test is a constrained test with the following method:

- Requires a high current laboratory
- A controlled Arc source
- A flame-resistant head equipped with sensors
- Enclosed in a box simulating the reflective properties of a switch cabinet
- Focus the Arc energy to the centre of the face and screen
- Creates a dirty Arc by using two different material electrodes
- The effect is to generate molten material and debris
- Tested at 400v AC for 500ms

It is now mandatory when applying for the European EN 166 option 8 standard on new face screens to prove Arc protection suitability by also testing to GS-ET-29 'Arc-in-a-box' test outlined above.

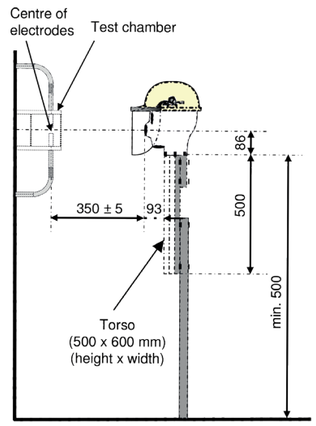

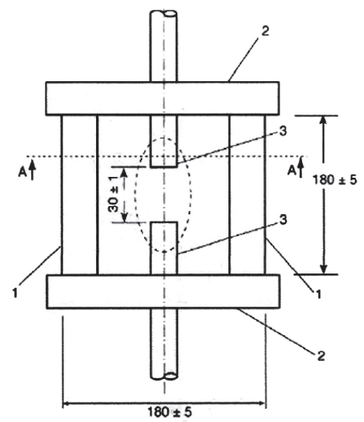

3.3 UNITED STATES NFPA 70E – ASTM F2178

The US standard requires that PPE, designed to protect against Arc Flash, must use a test commonly known as either 'Arc Man' or 'Open Arc'.

ASTM F2178 uses a high current laboratory, in which a controlled Arc source is used with flame resistant mannequins and instrumented monitor sensors, where 4 sensors are located under the chin, in the eyes area and in the mouth area. (See diagram below)

This test measures the total amount of heat received at the sensor surface, namely:

Convectional heat
Electromagnetic radiation

While this method of testing has been commonplace in the US for many years, ASTM F2178 is not accepted within the EU because it tolerates a 50% probability of the user sustaining a second degree burn.

Figure 3.2: Arc Man/Open Arc test

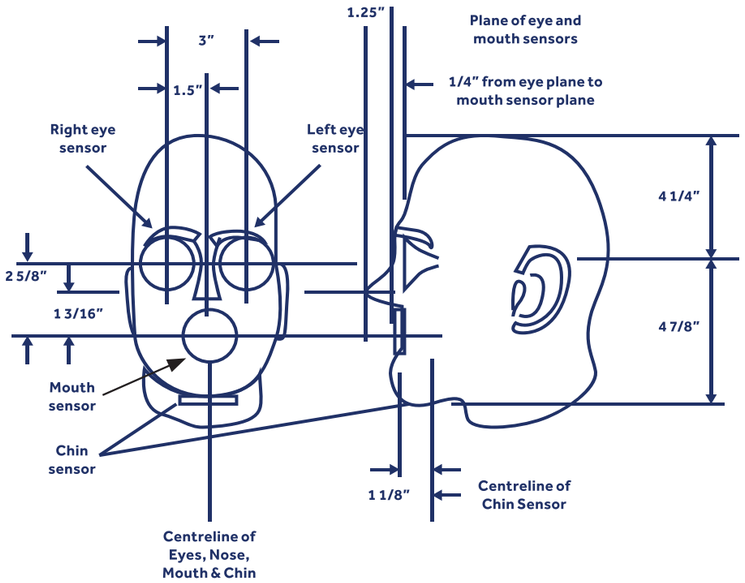

3.4 THE PROBLEM WITH COMPARING DIFFERENT ARC FLASH TESTS

The test results of the 'Arc Man' and the 'Arc-in-a-box' methods are generally not comparable due to many physical and technical differences of the two test methods, such as different test setups, causing different kinds of Arc Flash dispersals (Free Field/Open Air Arc Flash vs Constrained Arc Flash).

Therefore, face protection personal protective equipment that passes one test can fail in the other, and vice-versa, even when identical energy emission is considered. As referenced in 3.3 above, the Arc Man ATPV test tolerates a 50% probability of a second degree burn, where the Arc-in-a-box test only accepts PPE tested with no probability of a second degree burn.

As a result, the regulatory framework for Arc Flash protection is often confusing for those attempting to select the correct face protection. While some countries do not have any Arc Flash standards, other countries have developed individual standards which are not necessarily transferable with each other.

Asia and South America tend to be more aligned with European standards, while Australia is somewhat in limbo at present with no Arc standards.

3.5 THE PUSH FOR A UNIVERSAL RECOGNISED SAFETY STANDARD

A fragmented landscape then, but something that is currently being addressed through the creation of a new globally recognised safety standard for face protection, including for Arc Flash.

Manufacturers of screens, like Paulson, have come together with 30 other industry experts from around the world to make up an internationally focused team to establish an IEC standard that will benefit the safety of all.

The process is nearing completion and at this stage there are not thought to be any objections. They therefore expect the new regulations to come into force in early to mid 2019.

Seeing Things Clearly:

The Challenges Faced and a Brighter Future for Face Protection Technologies

With the impending adoption of a universally recognised safety standard, it is even more important to understand the range of face protection options available, and what each can and can't protect the user from.

4.1 NON-ARC RATED FACE PROTECTION

In markets without established regulations, or to those uneducated about the hazards of Arc Flash, some will look to specialist forms of face protection, such as those commonly used in welding applications, as a potential solution.

However, these are not without their problems, most usually with regards to Visible Light Transmission (VLT), and sometimes they can bring additional dangers not previously considered.

Arc Welding Face Screens are too dark and do not provide enough absorption, while **Metallised Face screens** are also too dark for the vast majority of applications and demonstrate potential for the metal coating to vaporise at high levels of Arc Flash. Furthermore metallised face screens and other reflective solutions gain their protective properties from an extremely thin surface and if this surface becomes damaged, protection is not provided.

4.2 CLEAR POLYCARBONATE SCREENS (NON ARC RATED OR LOW LEVEL ARC RATED SCREENS)

Polycarbonate face screens (with or without chinguards) are some of the most common on the market and these protect against convectional heat, some fragments of shrapnel and the molten particles that can occur during a low calorie rated Arc Flash incident.

As long as Polycarbonate screens are the correct thickness and height as required in Option 8 of EN 166 (see section 3.2 above), they will provide sufficient protection within European GS-ET-29 Class 1 and are suitable for electrical working up to an Arc Flash incident of 3.2 cal/cm^2 (as established during the Arc-in-a-box test).

4.3 SPECIALISED ARC PROTECTION (HIGH LEVEL ARC RATED SCREENS)

A high level Arc Flash incident will also typically generate high levels of electromagnetic radiation, as well as ultra-violet light, infra-red light and high energy visible light.

As can be seen in the image, a basic polycarbonate screen cannot absorb the energy emitted from higher calorie rated Arc Flash incidents and will fail, putting the wearer in great danger.

This has therefore led to the development of specialised polycarbonate screens that meet the GS-ET-29 Class 2 requirement for electrical working up to 10.1 cal/cm^2 (as established during the Arc-in-a-box test) and provide a higher level of protection, when working in environments with a higher level or Arc Flash risk.

They will protect against convection heat, electromagnetic radiation (very important), as well as ultra-violet light, infra-red light and high energy visible light.

The above outlines the protection standards expected to meet European regulations, but as we saw in section 3.3, the United States has its own NFPA 70E – ASTM F2178 standard, designed to protect against Arc Flash (using the test commonly known as either 'Arc Man' or 'Open Arc'. The ASTM test method covers 4 PPE categories with Arc ratings ranging from 4 to 40 cal/cm^2 as shown in figure 4.3 below).

Figure 4.3 ASTFM F2178 PPE Categories

PPE Category	1	2	3	4
Minimum Arc Rating in cal/cm^2	4	8	25	40

CENTURION®
WHEN CLARITY COUNTS

4.4 CONSIDERING VISIBILITY AS MORE OF A PRIORITY

The issue of visibility for the user is something that cannot be underestimated in its importance. When we take it back to basics, we cannot escape the fact that for most people working with electricity, vision is incredibly important. And while wearing the correct form of PPE is of paramount importance, many have solely focused on protection and not enough to the impairment of vision.

We should really consider the optical properties as a priority, because otherwise we are creating a piece of equipment which will protect the wearer but is not practical for everyday use. Safety without compromise will improve compliance and perform as an aid to the worker rather than a hindrance.

Rod King, Test Engineer at Centurion, emphasises further:

" I have often heard it compared to a car seat belt, which is designed to keep us safe in the event of car crash, even though this is an occurrence that most of us realistically won't experience during our lifetime. However, the difference is that the seat belt doesn't prevent us from being able to drive the car effectively. It protects us but doesn't impair us. Whereas traditional Arc screens provide the protection, they can also impact on the vision of the user, and potentially their ability to do their job. The screens need to be both safe and effective. "

For this reason, applying special filters or coatings to existing face screens should not be considered as a solution either. Some will cause the user to get too hot or can melt in the event of an Arc Flash. Generally, all filters will offer poor transmittance of red and blue light, making them potentially hazardous for users working in poorly lit environments, such as completing a racking out in a switching cabinet.

Figure 4.4: The Electromagnetic Spectrum

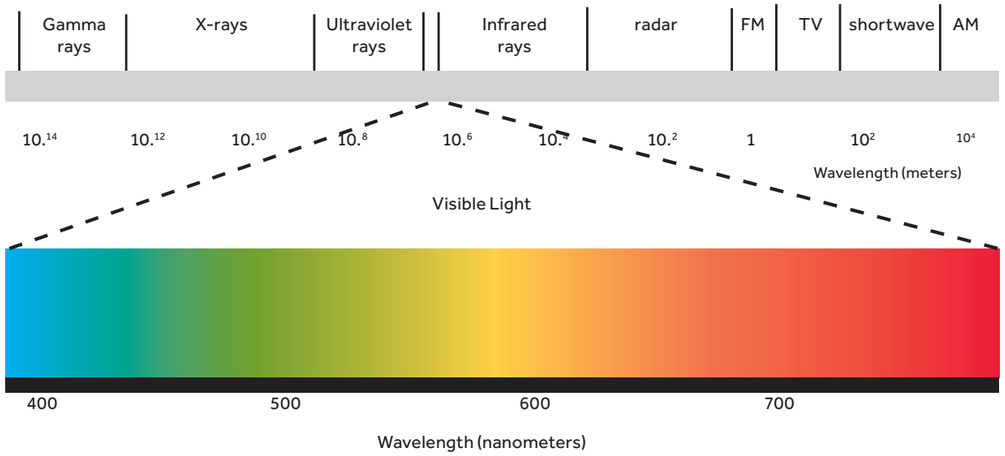

In such a situation, the user has to cope with huge variances in light, from brightly illuminated factory spaces to peering into and working inside the darkness of the switching cabinet, where the hole can be up to 1.5m in diameter. These changes in light make it very hard on the eyes, even without the added impediment of a coated screen.

King continues:

" There's a saying that 'At night, all cats are grey', meaning that in the dark, we cannot distinguish between colours, only variances in white, grey and black. This makes a task like racking out particularly hazardous. "

4.5 PROTECTING AGAINST ELECTROMAGNETIC RADIATION

There are two main methods used to protect the wearer against the electromagnetic radiation that is found in an Arc Flash incident.

Reflection: This works like a semi-permeable mirror, where the malign radiation is bounced back in order to protect the wearer. It is typically applied as a thin surface layer, however, once that mirror surface is damaged then the protection to the wearer is reduced or not provided at all.

The situation is further complicated by the fact that such damage is not always visually evident and cannot be functionally checked. As a result, this method should be seen as the "basic or entry level" Arc Flash protective technology.

Absorption: With this technique, the face screen supports the absorption of all the energy created during the Arc Flash incident. In addition, surface damage to the screen from wear and tear does not significantly affect the protection level offered. This makes it possible to conduct a functional check through a simple visual inspection.

However, this method of Arc protective technology is more scientifically complex and not easy to replicate and needs a high degree of technical expertise to be able to manage the absorbed energy. While basic absorption technologies could accelerate product aging, high tech solutions are even able to extent the in use life of the face screen.

4.6 'ACTIVE ABSORPTION'– THE MOST EFFECTIVE ARC PROTECTION SOLUTION

With the evidence and view that absorption is the best way of protecting the wearer from electromagnetic radiation, the engineering challenge was set to produce a face screen that can satisfy this.

" Until now, screen choice has been about making a compromise, "

explains Centurion's Test Engineer, Rod King,

" you couldn't have great protection coupled with great visibility through the screen. In the event of an Arc Flash, the structure of the screen remained the same and the protection offered was 'passive'. "

With 'Active Protection', now found in Paulson's Active Smart Technology face screens, the face screens consumes the energy and the molecular structure of the face screens changes in the event of an Arc Flash.

Active Absorption - Paulson Class 2 Arc Face Screen Protection Smart Technology
Nanotechnology uses the Arc energy to modify the face screens
Protects using carbonisation technology
Generates a heat and radiation absorbing crust
Protection starts at the point of flash
The Arc energy is consumed and used for modification
Uses ablation - meaning: consumes the Arc energy for controlled surface dissociation
Thick layer then blocks light and heat by additionally created insulating air cells
Higher VLT and better colour perception

King further explains:

" The adopted nanotechnology uses the Arc energy to modify the face screen and generate a carbonite layer across it, a dark crust which can absorb heat, light and electromagnetic radiation. The protection starts at the point of the Arc Flash and the whole process only takes a matter of milliseconds.

It has taken 25 years of research and development for Paulson to arrive at this solution, it is not just a simple screen. It represents a great leap forward in protecting workers from the various hazards and dangers that come from an Arc Flash. "

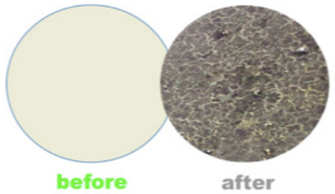

4.7 PAULSON'S NEW CLEAR-GREY HT TECHNOLOGY – THE FUTURE OF SPECIALISED ARC PROTECTION

Utilising the Active Protection technology outlined above, we are starting to see the next generation of specialised screens designed to offer the maximum protection for the wearer from an Arc Flash.

First to market is the new Contour XIII Clear-Grey HT system from head protection experts Centurion. Placing visibility as uncompromised safety firmly at its core, it offers Paulson's HT technology, the clearest European Class 2 screen with the highest Visible Light Transmittance (VLT) rating of more than 80%.

Rod King, Test Engineer from Centurion explains the benefits for the wearer:

" The nanoparticle technology in the injection moulded screen provides complete protection, and compared to Green shaded Arc screens, the new Clear-Grey HT screen transmits more wavelengths, therefore making colours clearer and more visible across the colour spectrum.

This means increased safety levels come from improved colour recognition due to the unrivaled high VLT even at poorer illumination, whilst the chinguard is also made of the same Clear-Grey HT material and thus allows for excellent downward vision as well.

As a result of intensive research and development, the improved active nanoparticles technology used in the new Clear-Grey HT screen has proven to provide consistent impact and arc protective properties. Paulson are therefore confident to confirm an extended in use life of 10 years (of constant indoor or outdoor product usage).

By working closely with the team responsible for steering the new, universally recognised safety standards for Arc Flash protection, we know that these new products don't just meet the new standards, but exceed them, offering the greatest level of protection for years to come. "

King added:

" This new screen development needs to be seen as part of a complete 'above-the-neck' system. Combining the new screens with the Nexus or Concept helmet and Contour carrier system, which is engineered exactly to the contours of the helmet in order to keep any remaining debris away from the facial area, has created what we believe is the most effective system on the market. "

CENTURION®
WHEN CLARITY COUNTS

Whose Responsibility is it Anyway?

The Need to Increase Understanding of Above-The-Neck Protection Standards & Solutions

The final challenge is to now ensure the correct guidance for both employers and employees with regards to these latest developments in above-the-neck protection.

There is often some confusion around who in an organisation is responsible for educating about the dangers of Arc Flash in the first instance.

Chris Tidy, Technical and Training Specialist at Centurion believes it should be much clearer:

"It is essential for employers to ensure their own health and safety policies address the risks posed by an Arc Flash incident. We also urge those working in industries at risk of an Arc Flash incident to develop specific Arc Flash safety procedures.

This should include advising on best practice when it comes to appropriate PPE for different situations, as well as implementing regularly updated staff training programmes in order to ensure that all key stakeholders within a business are aware of the latest industry guidelines and standards.

At Centurion, we want to assist in this and we have developed an entire syllabus and dedicated resources for training and education. As an expert, we feel we can best assist to provide more detailed and precise education with regards to above-the-neck which we see as the most important area of the body to protect."

More and more work is now being done on energized systems. Our 24/7 society doesn't always allow for switch-off or shutdowns in order for maintenance, such as cleaning, to take place. Wherever possible, companies should isolate an area by following the Hierarchy of Controls in order to carry out such work.

We can greatly reduce the chance of an Arc Flash occurring by keeping a clean system, so it's obviously of great importance, but working on an energized system will always bring some dangers. It is therefore imperative that the specialists who work on such systems have the best possible safety equipment that not only protects them but allows them to do their job to the best of their abilities, in a safe and efficient manner.

Rod King, Test Engineer at Centurion summarised:

"As experts and specialists in this sector, our aim is not just to offer the best solution for the industry, but also with this paper, to help educate. Our intention is to support both employers and employees together – it must all go hand in hand in order to be truly effective."

References

"Avoiding Arc Flash" – National Safety Council by Sarah Trotto (2015)
"Electricity at Work" – Health & Safety Executive (2013)
"Arc Flash: Blast Rites" – Health & Safety at Work by Louis Wustemann (2011)
"Electrical Safety and You" – Health & Safety Executive (1998)

Author

ROD KING, TEST ENGINEER AT CENTURION SAFETY PRODUCTS

Rod is a fully qualified Mechanical Engineer starting his professional career within the Ministry of Defence working in many diverse areas such as aviation, hydraulics, fuel systems and filtration.

He then moved onto work as a Senior Test and Development Engineer responsible for Condition Monitoring within many business sectors such as aviation, hydraulics, power generation and off-shore oil and gas. It was within these industries that he became head of product testing to ISO standards including CE and ATEX product certification together with new product development. Rod was a representative within the British Fluid Power Association (BFPA) Technical Committee TC6 'Contamination Control' contributing to and improving British Standards and Directives.

Since joining Centurion, Rod has become the technical representative within many new project developments for 'above-the-neck safety systems' and is responsible for the testing within these project teams. He is also a committee member of PH2, the UK committee for eye and face protection.

CENTURION®
WHEN CLARITY COUNTS

CENTURION®
WHEN CLARITY COUNTS